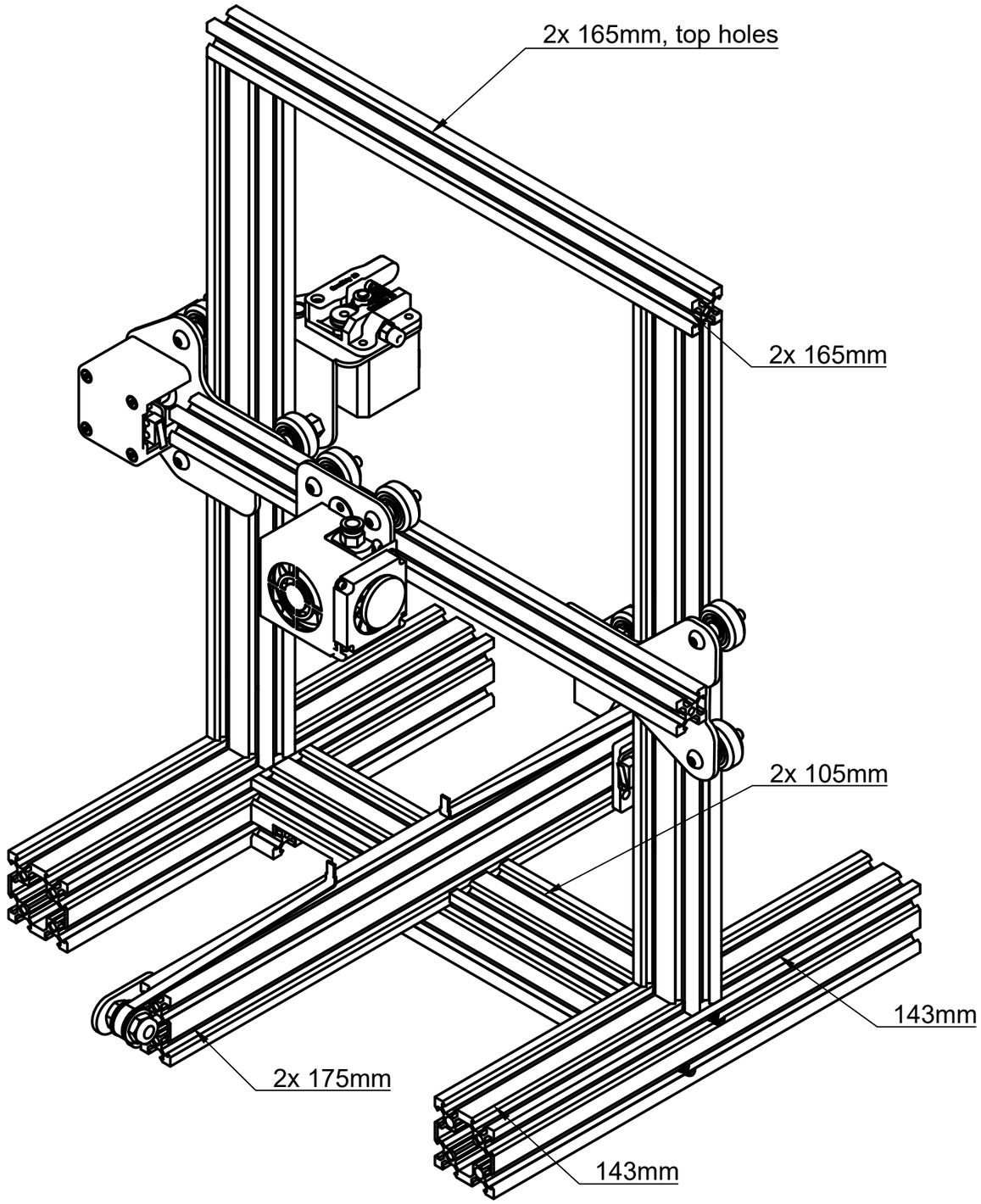
2x 165mm, top holes
2x 165mm
2x 105mm
143mm
2x 175mm
143mm